HAKKO

HAKKO FR-802
SMD REWORK STATION

SMD Rework Station

Maintenance & Checking

1. PARTS LIST / STATION

NOTE:
Spare or repair parts do not include mounting screws, if they are not listed on the specifications. Screws must be ordered separately.

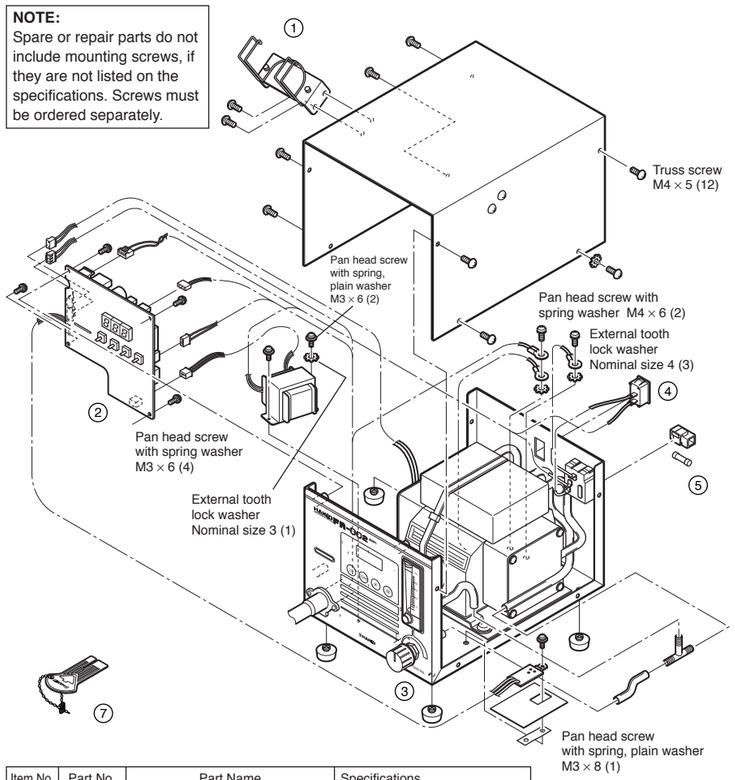

Item No.	Part No.	Part Name	Specifications
①	B3006	Handpiece holder	
②	B3012	P.W.B./for temperature control	100~120V, with triac
	B3013	P.W.B./for temperature control	220~240V, with triac
③	B1028	Knob	With screw
④	B1084	Power switch	
⑤	B2468	Fuse/125V-5A	100~120V
	B1258	Fuse/250V-3.15A (S)	220~240V
⑥	B2419	Power cord, 3 wired cord & American plug	
	B2421	Power cord, 3 wired cord but no plug	India
	B2422	Power cord, 3 wired cord & BS plug	220V KTL,
	B2424	Power cord, 3 wired cord& European plug	230V CE
	B2425	Power cord, 3 wired cord & BS plug	230V CE U.K.
	B2426	Power cord, 3 wired cord & Australian plug	
	B2436	Power cord, 3 wired cord & Chinese plug	China
⑦	B2972	Control card	

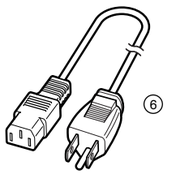

● Optional Parts

Item No.	Part No.	Part Name	Specifications
①	B1438	FP pick-up	With 1pc. of pick-up wire (S) &(L)
②	B1439	FP pick-up wire (S)	
③	B1440	FP pick-up wire (L)	

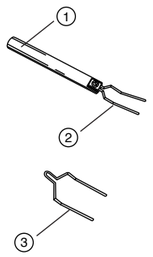

HAKKO
HAKKO CORPORATION
HEAD OFFICE
TEL:+81-6-6561-3225 FAX:+81-6-6561-8466
http://www.hakko.com E-mail:sales@hakko.com

Please access to the following address for the other Sales affiliates.

http://www.hakko.com

Copyright © 2005 HAKKO Corporation. All Rights Reserved.

2005.9
MA01370XZ050913

1. PARTS LIST / HANDPIECE

NOTE:
Spare or repair parts do not include mounting screws, if they are not listed on the specifications. Screws must be ordered separately.

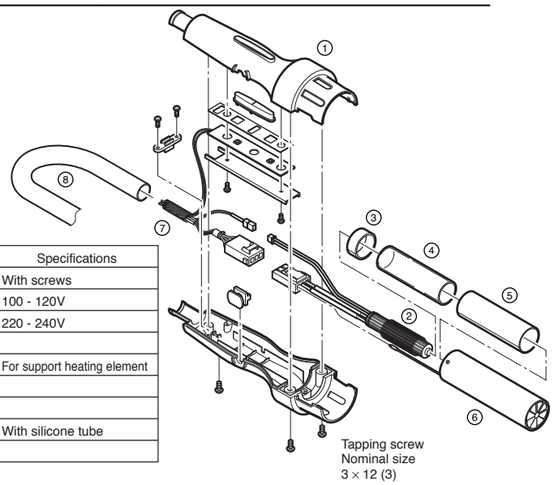

Item No.	Part No.	Part Name	Specifications
①	B3010	Handle	With screws
②	A1523	Heating element	100 - 120V
	A1524	Heating element	220 - 240V
③	B3009	Mica pipe B	
④	B2995	Quartz glass pipe	For support heating element
⑤	B3008	Mica pipe A	
⑥	B3095	Pipe	
⑦	B3014	Cord assembly	With silicone tube
⑧	B1188	Silicone hose	

2. MAINTENANCE / INSPECTION

Broken Heater or Sensor

⚠ CAUTION
Replacing the heating element is very dangerous. Be sure to turn the power switch OFF and be careful of the following procedure when replacing the heating element.

A Open the handpiece.
1. Move the tube downward. (Figure 1)
2. Remove the three screws holding the handpiece together.
3. Remove the pipe from the protruding portion of the handle.

⚠ CAUTION
Quartz glass and heat insulation are inside the pipe. Be careful not to drop or lose these items.

4. Disconnect the heater sensor connector and remove the heater.

B Measure the resistance value.
1. Measure the resistance value (a) of the sensor. The correct value is 0Ω.
2. Measure the resistance value (b) of the heater. The correct values are approximately 33Ω (±10%) (100-120V), 85Ω (±10%) (220-240V) at room temperature.
   If the resistance value is incorrect, replace the part. (Refer to the instructions included with the replacement part.)

⚠ CAUTION
Handle the heating element with care. Never rub the heating element wire!
Insert the handle's projection into the hole in the pipe.

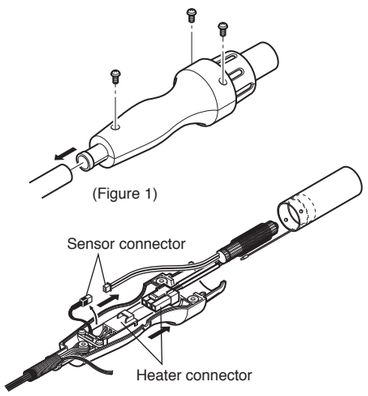

3. TROUBLE SHOOTING GUIDE

⚠ WARNING
- **Before checking the inside of the HAKKO FR-802 or replacing parts, be sure to disconnect the power plug. Failure to do so may result in electric shock.**

● The unit does not operate when the power switch is turned on.

CHECK : Is the fuse blown?
ACTION : Investigate why the fuse blew and then replace the fuse. If the fuse blows again, send the unit in for repair.

● S-E flashes, indicating a sensor error.

CHECK : Is the sensor broken?
ACTION : Measure the resistance value of the sensor. The correct value is 0Ω. If the resistance value is incorrect, replace the part.

● H-E flashes, indicating a heater error.

CHECK : Is the heater broken?
ACTION : Measure the resistance value of the heater. The correct value are approximately 33Ω (±10%) (100~120V), 85Ω (±10%) (220~240V) at room temperature. If the resistance value is incorrect, replace the part.

4. OPTIONAL NOZZLES

⚠ CAUTION
The size in Name/Specification indicates the size of IC package.

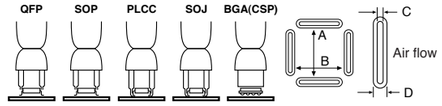

Unit: mm
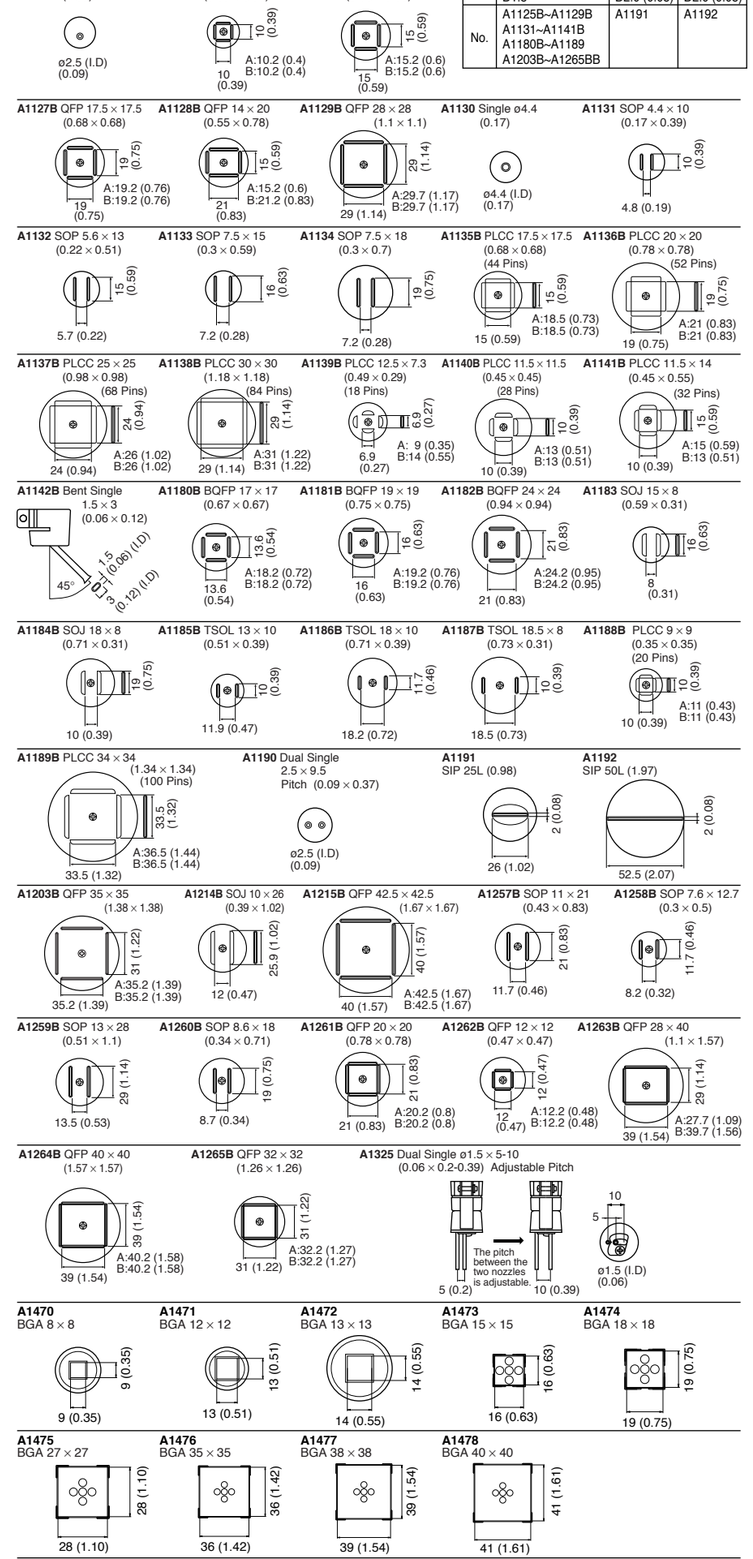
	C0.8 D1.8	C1.0 (0.04) D2.0 (0.08)	C0.8 (0.03) D2.0 (0.08)
No.	A1125B~A1129B A1131~A1141B A1180B~A1189 A1203B~A1265BB	A1191	A1192