HAKKO

HAKKO MELTER

HAKKO Melter 804

Instruction Manual

Thank you for purchasing HAKKO Melter 804.
Please read this manual before operating HAKKO Melter.
Keep this manual readily accessible for reference.

TABLE OF CONTENTS

1. FEATURES · 1
2. PACKING LIST · · · · · · · · · · · · · · · · · · · 1
3. SPECIFICATIONS · · · · · · · · · · · · · · · · · · 1
4. WARNINGS AND CAUTIONS · · · · · · · · · · · · · 2
5. MAJOR APPLICATIONS · · · · · · · · · · · · · · · 3
6. ADHESIVES · 3
7. PRECAUTIONS BEFORE USE · · · · · · · · · · · · 4
8. TEMPERATURE ADJUSTMENT · · · · · · · · · · · · 5
9. OPERATION · 6
10. CHANGING ADHESIVES · · · · · · · · · · · · · · 8
11. REPLACING THE NOZZLE · · · · · · · · · · · · · 9
12. PARTS LIST · · · · · · · · · · · · · · · · · · · 10

1. FEATURES

The Hakko Melter is a handy type gluing gun. Simply insert a stick of adhesive into the insertion hole at the end and pull the trigger to discharge the adhesive when it was melted.

●Suitable for electronic components

The Hakko Melter's temperature control function enables it to be used for a number of different adhesives, including polyamide adhesive most suited to electronic components.

●Easy to use

The heater uses series-wound method for fast warm-up, allowing it to be used for several operations in succession. The Melter is light-weight and easy to grip, so you won't get tired even after long period of use.

●Safety Measures

The unit has a built-in tempeature fuse to prevent overheating.

2. PACKING LIST

Hakko Melter ·····1
#13 Spanner ·····1
#14 Spanner ·····1
Instruction manual·····1

3. SPECIFICATIONS

Model name	Hakko Melter 804
Power consumption	100W
Melting temperature	100-200°C (212-392°F)
Discharge capacity	900g (2.0lbs) /hour
Weight (w/o cord)	350g (0.77lbs)
Length of cord	2 m (6.56')
Fusing temperature	192°C (378°F)
Standard nozzle	ϕ2.0mm (0.08")

A1088
A1086
A1083

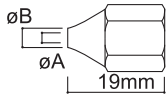

A1089
A1087

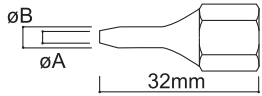

A1084

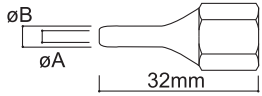

●Replacement / Optional parts

Part No.	Name / Description	ϕA	ϕB
A1088	Nozzle ϕ1.0mm	1.0	2.5
A1086	Nozzle ϕ1.5mm	1.5	3.0
A1083	Nozzle ϕ2.0mm	2.0	4.0
A1089	Long nozzle ϕ1.0mm	1.0	2.5
A1087	Long nozzle ϕ1.5mm	1.5	3.0
A1084	Long nozzle ϕ2.0mm	2.0	4.0
B1347	Stand assembly		

※Specifications and design are subject to change without notice.

4. WARNINGS AND CAUTIONS

Warnings and cautions are defined as follows. Please understand them before you read this instruction manual.

⚠ **WARNING**: Failure to comply with a WARNING may result in serious injury or death.

⚠ **CAUTION** : Failure to comply with a CAUTION may result in injury to the operator, or damage to the items involved.

● Be sure to follow the cautions in below for your safety.

⚠ WARNING

- This product is different adhesive strength depending on the material conditions of use and the adhesive surface, will dissolve the adhesive surface depending on the material.
- If the intensity is required, do the adhesion in other ways.
- Do not touch the nozzle area around the nozzle or adhesive.
- Do not use the unit near paper or other inflammable materials.
- Inform others in the area that the unit is hot and should not be touched.
- For safety reasons, use proper protection such as safety gloves, safety goggles, safety helmet and earplugs as needed.
- Do not use if power cord and plug are damaged, insertion of the outlet is loose.
- Do not leave the unit unattended with powered on. Unplug when not in use for more than 20 minutes.
- Steam generated from the heated product may be irritating to the eyes and the respiratory.
- Do not adhesion to and becomes higher things and places of temperature. Adhesive force is lowered, I softened.
- Do not lie down the unit or stand it with the nozzle upward during it is hot or powered on Melted adhesive may come down and cause a burn or troubles. The unit should be kept with the nozzle downward.
- Disconnect the power plug when changing parts or storing the heating gun.
- Do not modify the melter.
- If the power cord is damaged, it must be replaced by the manufacturer, its service agent or similarly qualified person in order to avoid personal injury or damage to the unit.
- Any maintenance, repair, modification or disassembling of the heating gun must be done only by a repair technician.
- Pop out stick melted from the nozzle destination when hot melt adhesive is replenished, there is a risk of burns. Be supplemented with nozzle destination facing down always on the bench.
- This appliance is not intended for use by persons (including children) with reduced physical, sensory or mental capabilities, or lack of experience and knowledge, unless they have been given supervision or instruction concerning use of the appliance by a person responsible for their safety.
- Children shall not play with the appliance.

● **To prevent accidents or damage to the melter, be sure to observe the following:**

⚠ CAUTION

- Do not use the unit for applications other than gluing.
- Use only genuine Hakko replacement parts.
- Do not try to pull out half-melted adhesive from the unit. It may cause a burn or troubles.
- Do not pull the trigger by force.
- Insert stick adhesive to the unit after removing dust on the surface of glue.
- Use only stick adhesive with diameter 11.5 to 12.0 mm (0.45 to 0.47in.).
- The unit is for a counter or workbench use only.
- Use the Melter gun only with a power source that meets the specified conditions for unit use.
- Do not allow the Melter gun to become wet, or use it with wet hands.
- Always handle the unit with care. Avoid dropping the unit or giving it a sharp jolt.
- Do not expose the eye directly to the steam. Do not inhale the long steam.
- If the high temperature of the adhesive attached to the skin, immediately flushed with cold water, covered with a clean dressing. Do not attempt to peel off the adhesive. Consult a doctor if you burn.
- Remove power cords by holding the plug. not the wires.
- Do not bend, stretch or twist the power cord.
- Keep out of reach of children.
- A repair technician should perform periodic maintenance on the heating gun.
- Do not take any dangerous behaviors.

5. MAJOR APPLICATIONS

Polyamide type
- To insulate or reinforce soldered area
- To fasten condensors, resistors & etc.
- To fasten jumper wires
- To insulate potting of terminals
- To fasten the ends of series-wound coils
- To fix deflecting yokes and variable coils

EVA type
- To make cardboard box, gift box & etc.
- To glue wood, metal or plastic materials
- To bond fabrics or shock absorbent materials
- To repair or touch-up incompletely bonded items

6. ADHESIVES

The Hakko Melter has been specially designed to use sticks of hardened adhesive.
Use the adhesives listed as under or others with 11.5 to12.0mm (0.45 to 0.47") in diameter.
(No.810 : UL94V-0 Recognized)
Type of adhesives and applications

Part No.	810	811	812
Type & volume	Polyamide, 1kg	EVA, 1kg	EVA, 14pcs
Color	Yellowish-Brown	Milky-White	
Dimensions	Φ 11.5X220mm(0.45x8.6")	Φ 11.5X220mm(0.45x8.6")	
Viscosity	2,300cps.	5,800cps.	
Open time	10sec.	40sec.	
Heat resistant temp.	100°C (212°F)	55°C (131°F)	
Suitability			
P.W.B.	◎		
Wood	◎	◎	
Paper	◎	◎	
Metal	○	○	
Plastic	○	○	
Packaging	aluminum foil bag	polyethylene bag	blister pack
*Adhesives marked with ◎are more suited for that material than others.			

Hakko Melter Sticks contain no organic solvents, so they are non-toxis and non-polluting.

⚠ CAUTION

- Be sure to use sticks of adhesive measuring φ11.5 to 12.0mm(φ0.45 to 0.47"). Use of other sizes may result in backflow or clogging the unit.
- When using adhesives made by other companies, be sure to thoroughly check what kind of materials it contains, etc. before using.
- Avoid storing adhesives in places with high temperature and high humidity.
- Polyamide adhesives have high humidity absorption, so be sure to close the fastener of the foil bag as soon as possible after opening it.
- When using stored adhesives, be sure to consume the oldest one first.

7. PRECAUTIONS BEFORE USE

Burn/Fire

- The melted adhesive and the nozzle area become extremely hot. Be careful not to suffer burn.
- Make sure the unit has been cooled down completely before you put it away.

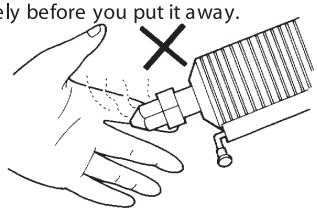

Operating Environment

- Do not use the unit in damp places. This will reduce its insulation and may cause an accident.
- Avoid using the unit in places with extremely high or low temperature.

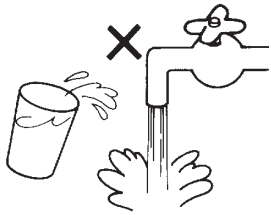

Power

Do not leave the unit unattended with plugged in. It does not only shorten its service life but also may cause an accident.
Make sure to unplug the unit from the outlet after your use.
(see page 8 "Finishing up")

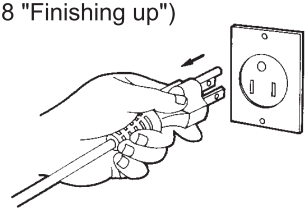

Handling

- When using the unit or putting it down, be sure to keep it always with the nozzle downward. Or, the melted adhesive may flow back into the unit and cause it to fail.
- Soon after the unit is plugged in, a small amount of adhesive may flow out of the nozzle.
  This is caused by thermal expansion and never abnormal. However, mind where you place the unit before you plug it in.

The unit should be kept with the nozzle downward.

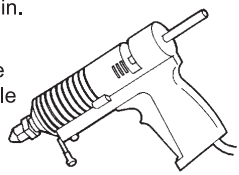

Trigger

You may feel the adhesive is not discharged smoothly during your continuous operation, or when you did not give the unit enough time for warming up at the start. In such case, the adhesive has not probably melted enough. Let it stand for a while until the adhesive has melted.

Also, be careful not to apply too much force when pulling the trigger. This may damage the unit.

Adhesive

- Be sure to use only adhesives suitable to the unit. (see the page 3 "Adhesives")
- Do not pull the adhesive out from the unit while you are using. This may allow the melted adhesive to stick to the insertion hole or other movable parts, and lead the unit to fail.

Do not pull it out !

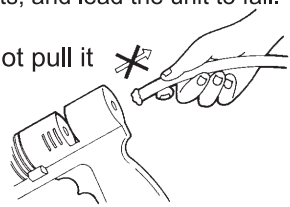

8. TEMPERATURE ADJUSTMENT

The dial on the Melter can be used to set the unit to any of five different temperatures. Set the dial to the temperature most suited to the adhesive being used.

Adjust the temperature.
Use a small screwdriver with regular blade to turn the dial to the desired setting 1 to 5.

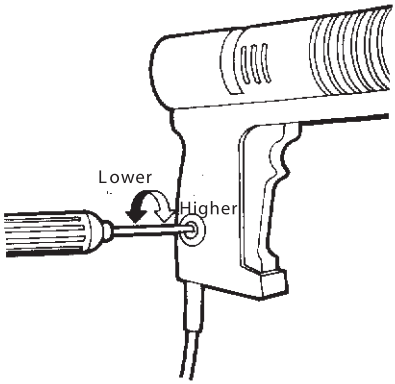

Standard setting guide of the temperature

Setting	Nozzle Temp.	Type of adhesive
5	200℃ (392 F)	Polyamide (No.810)
4	180℃ (356 F)	EVA (Nos.811・812)
3	150℃ (302 F)	
2	130℃ (266 F)	
1	100℃ (212 F)	

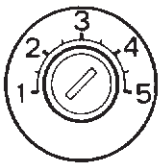

⚠ CAUTION

- Be careful not to turn the dial with any more force than necessary.
- Do not change the dial setting while the Melter is in use.

9. OPERATION

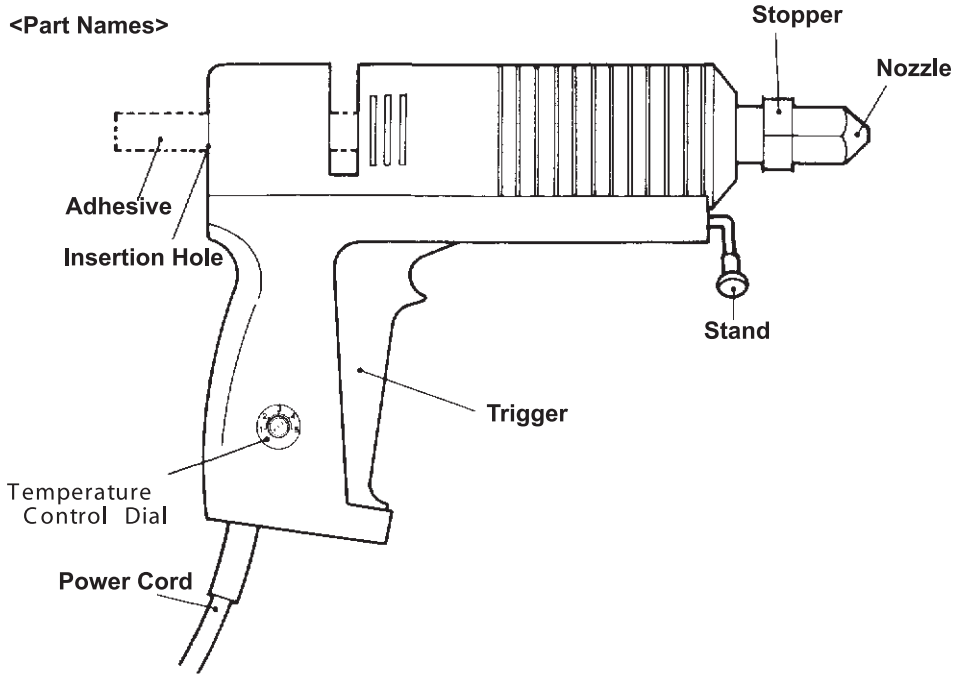

<Preparation>

①**Check to make sure the stand is attached (as shown in the figure above).**

②**Insert the plug into an outlet.**

⚠ CAUTION

Put the unit on a stable place with the nozzle downward.

③**Set the desired temperature.**
See the page 5 "Temperature Adjustment".

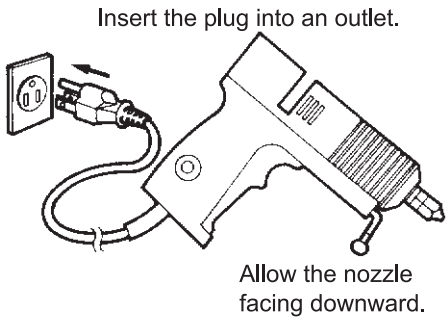

9. OPERATION

＜Starting in＞

①**Insert the stick of adhesive.**

- Remove any dirt or dust from the adhesive stick.
- Insert the adhesive stick into the hole at the end of Melter, then wait for the unit warm up.
- Test by pulling the trigger ; the unit is ready to use when adhesive flows easily out of the unit (It will take about 3 minutes for warming up).
- If the unit is left plugged in for more than 10 minutes with the adhesive stick in it, the flow of adhesive from the nozzle may become sluggish; this is normal. In such case, pull the trigger gently, being careful not to exert too much force, until the adhesive flows smoothly.

②**Prepare to apply the adhesive.**

- Make sure the place where the adhesive is to be applied is clean (The adhesive will not stick properly if there is any oil, rust or the like).

③**Apply the adhesive.**

- Point the nozzle toward the place where the adhesive is to be applied and squeeze the trigger. The adhesive will flow out.
- Adjust the amount of adhesive emitted by changing the amount of pressure exerted on the trigger.

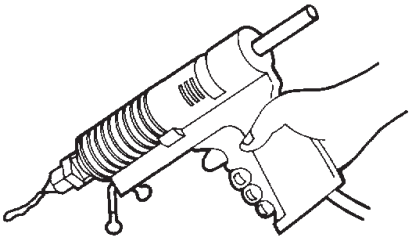

⚠ CAUTION

Be careful not to exert too much force when squeezing the trigger. Squeezing the trigger too hard when the adhesive has not melted sufficiently or during a series of operations may cause damage to the unit.

It's advisable to pre-heat the object by a hair drier or the like before you apply the adhesive to the materials in cold conditions.

9. OPERATION

＜Finishing up＞

① Remove the plug from the outlet.

② Squeeze the trigger about 5 times to discharge any remaining adhesive.

⚠ CAUTION

If this is not done, it may take a longer time for Melter to heat-up the next time it is used.

> When stopping the work temporarily,
> BE SURE TO REMOVE THE PLUG FROM THE OUTLET WHEN THE UNIT IS NOT TO BE USED FOR 20 MINUTES OR MORE.
> If the Melter was left for a long period of time with the plug still in the outlet, the adhesive in the cylinder would overheat and an accident or troubles may occur.

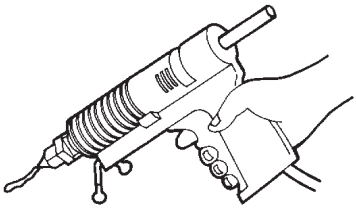

Squeeze the trigger about 5 times.

10. CHANGING ADHESIVES

Insert the new stick of adhesive and then squeeze the trigger to use up all of the old adhesive.

⚠ CAUTION

- Be sure not to remove the adhesive stick while the gun is in use.
- Adhesives of the same type may be mixed with no problem, but as much as possible you should avoid mixing two different types of adhesive.

Insert the new stick and squeeze the trigger to use up all of the old adhesive.

11. REPLACING THE NOZZLE

⚠CAUTION The unit becomes hot. Be careful and wear the gloves for operation.

①Plug in the unit.
Insert the plug into the outlet and wait approx. 3 minutes.

②Hold the stopper in place.
Use the provided #14 spanner to hold the stopper in place.

③Remove the nozzle.
Use the provided #13 spanner to turn the nozzle counterclockwise and remove it. When doing so, be sure to hold the stopper in place with #14 spanner so only the nozzle is removed from the cylinder.

④Attach the new nozzle.
Use the #13 spanner again to screw on the new nozzle.

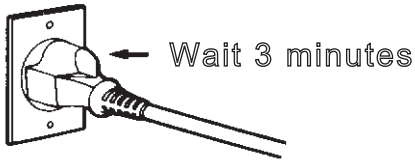

Wait until the adhesive has melted.

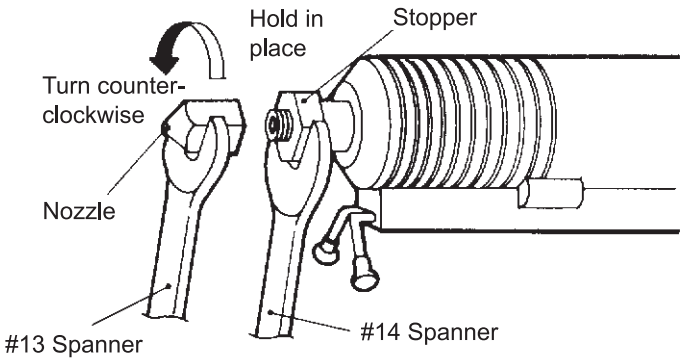

12. PARTS LIST

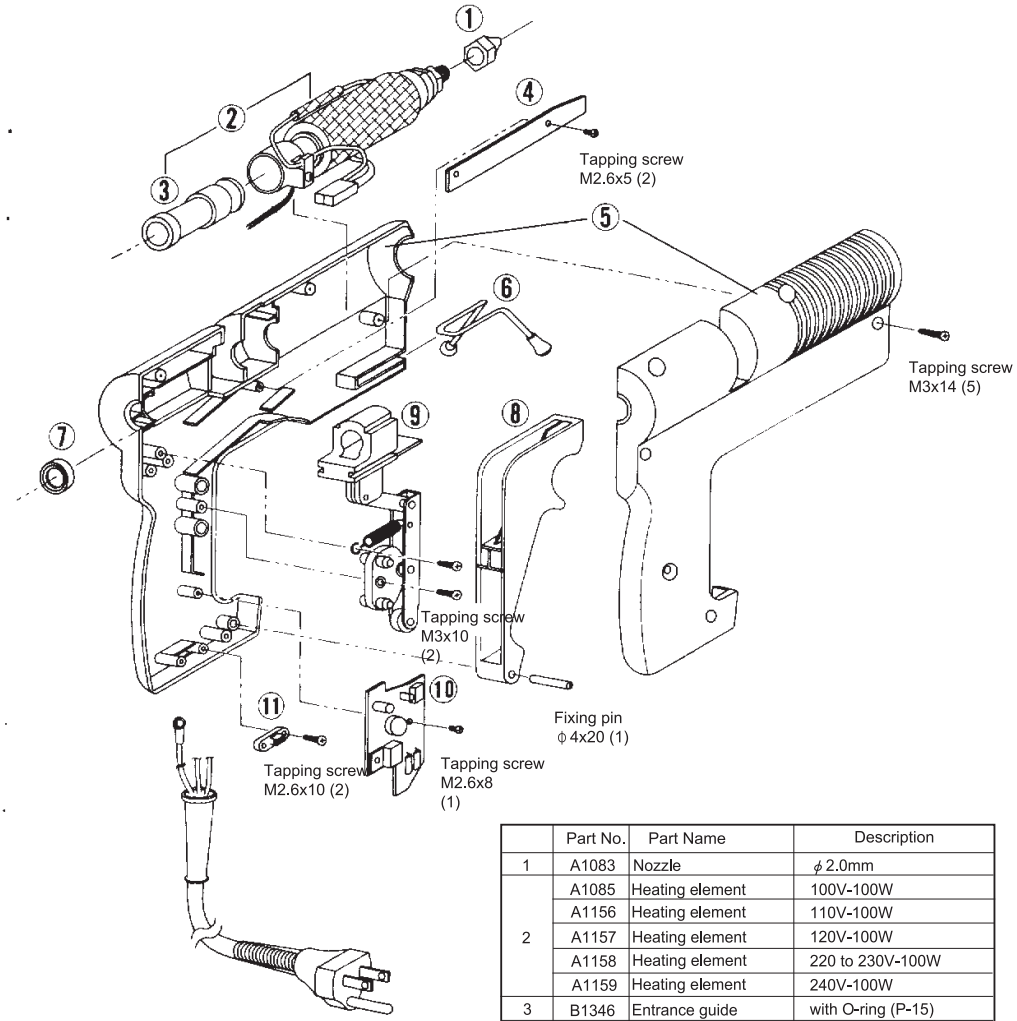

	Part No.	Part Name	Description
1	A1083	Nozzle	ϕ2.0mm
2	A1085	Heating element	100V-100W
	A1156	Heating element	110V-100W
	A1157	Heating element	120V-100W
	A1158	Heating element	220 to 230V-100W
	A1159	Heating element	240V-100W
3	B1346	Entrance guide	with O-ring (P-15)
4	B1351	Lead fixing plate	with screws
5	B1348	Housing	with screws & rating label
6	B1347	Stand assembly	
7	B1350	Entrance guide rubber	
8	B1352	Trigger	with fixing pin
9	B1349	Driving unit	with screws & spring
10	B1355	P.W.B.	100 to 120V
	B1462	P.W.B.	220 to 240V
11	B1354	Cord stopper	with screws

中國RoHS: 產品中有毒有害物質或元素的名稱及含量

部件名稱	有毒有害物質或元素					
	鉛(Pb)	汞(Hg)	鎘(Cd)	六價鉻 (Cr(VI))	多溴聯苯 (PBB)	多溴二苯醚 (PBDE)
噴嘴	×	○	○	○	○	○
電路板	×	○	○	○	○	○
驅動組件	×	○	○	○	○	○
熱敏電阻	×	○	○	○	○	○
管塞	×	○	○	○	○	○
插頭	×	○	○	○	○	○

○： 表示該有毒有害物質在該部件所有均質材料中的含量均在SJ/T 11363-2006 標準規定的限量要求以下。
×： 表示該有毒有害物質至少在該部件的某一均質材料中的含量超出SJ/T 11363-2006 標準規定的限量要求。

HAKKO CORPORATION

HEAD OFFICE
4-5, Shiokusa 2-chome, Naniwa-ku, Osaka 556-0024 JAPAN
TEL:+81-6-6561-3225 FAX:+81-6-6561-8466
http://www.hakko.com E-mail:sales@hakko.com

OVERSEAS AFFILIATES
U.S.A.: AMERICAN HAKKO PRODUCTS, INC.
TEL: (661) 294-0090 FAX: (661) 294-0096
Toll Free (800)88-HAKKO
http://www.hakkousa.com
HONG KONG: HAKKO DEVELOPMENT CO., LTD.
TEL: 2811-5588 FAX: 2590-0217
http://www.hakko.com.hk
E-mail:info@hakko.com.hk
SINGAPORE: HAKKO PRODUCTS PTE., LTD.
TEL: 6748-2277 FAX: 6744-0033
http://www.hakko.com.sg
E-mail:sales@hakko.com.sg

Please access to the following address for the other Sales affiliates.

http://www.hakko.com

© 2003-2015 HAKKO Corporation. All Rights Reserved.

2015.5
MA00261XZ150501